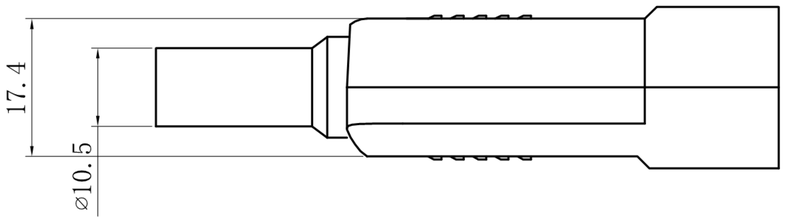

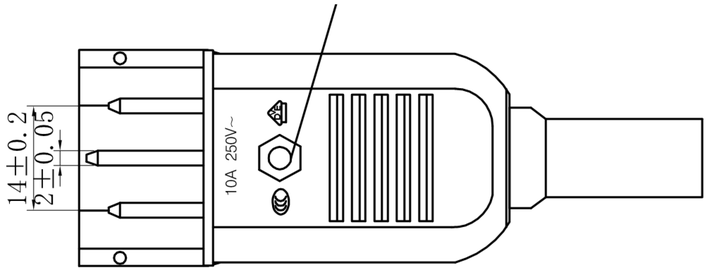

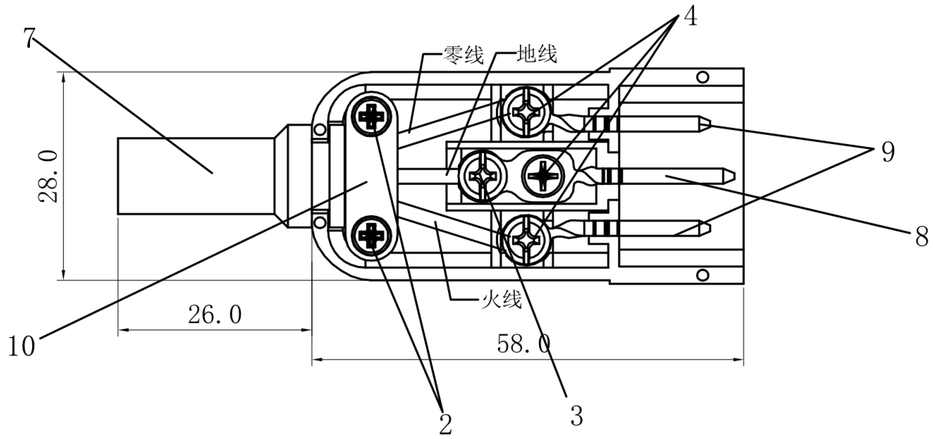

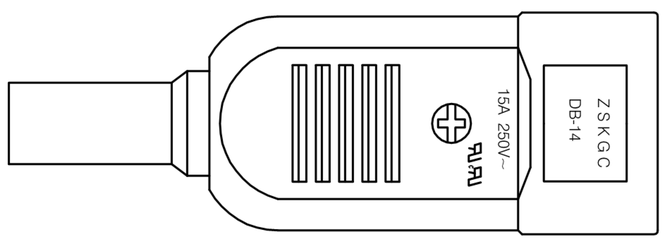

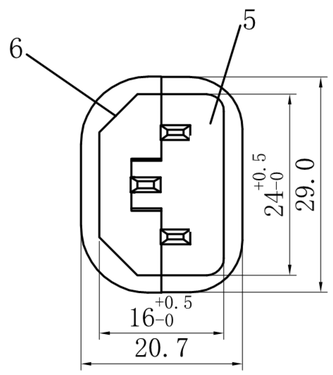

Rating :

15A 250V AC UL cUL
10A 250V AC VDE 3C

Insert And Extract Force: 1.36kgf~6.8kgf

Terminal Strength: **≥60N**

Operating Life: ≥6000 cycles

Withstand Voltage: Between all terminals:2500VAC（50-60Hz)1min
terminals to Base:3750V AC（50-60Hz)1min
Leakage Current : 1mA

Insulation Resistance: ≥100MΩ 500V DC

Body Materil: **PC** 94V-2~0

序号	部品名称	材质	处理	数量	备注
1	M3*3.5螺母	铁	镀锌	1	
2	M2.5-8自攻螺钉	铁	镀锌	2	
3	M3*15螺丝	铁	镀锌	1	
4	M3.5*5螺丝	铁	镀锌	3	
5	DB-14-1C基座	PC	黑色	1	
6	DB-14-1C盖板	PC	黑色	1	
7	DB-14-1C皮管	PVC	黑色	1	
8	DB-14-1CL长插销	黄铜	镀镍	1	
9	DB-14-1CS短插销	黄铜	镀镍	2	
10	DB-14-1C压线板	PC	黑色	1	

ITEM NO.	DESCRIPTION	DRAWN	DATE

東莞市高迪電子有限公司
DONG GUAN GAO DI ELECTRONICS CO., LTD

TOLERANCE UNLESS OTHERWISE STATED : Up to 5 ±0.2; Above 5 ~ 15 ±0.3; Above 15 ~ 30 ±0.4; Above 30 ~ 50 ±0.5; Angle ±0.3°

3RD. ANGEL'S | UNITS MM

DRAWN BY: Ming Ming Zou	DATE 10/31/13	MAT'L	
CHECKED BY: Ning Ning Su	DATE 10/31/13	FINISH	
APPROVED BY: Jia Xiang	DATE 10/31/13	SCALE	1 : 1
		SHEET NO.	1 of 1

TITLE	SWITCH+JACK		
MODLE	AC POWER SOCKET		
DWG NO.	GD-DB-14-1G	SIZE	A4
PART NO.		VER	R